受控

角号 PIN	定义 FUNCTION	颜色 COLOR
1	U相 MOTOR U	白 WHITE
2	W相 MOTOR W	黑 BLACK
3	V相 MOTOR V	红 RED
4	接地 MOTOR PE	PE

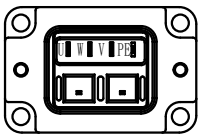

SC-MC6P-AE2G-N5

动力 Power

角号 PIN	定义 FUNCTION	颜色 COLOR
1	DC +5V	红 RED
2	GND	黑 BLACK
3	VB+	棕 BROWN
4	VB-	白 WHITE
5	SD+	蓝 BLUE
6	SD-	黄 YELLOW
7	SHIELDING	

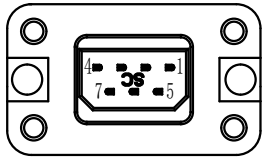

SC-MC7P-A82G-00

反馈 Feedback

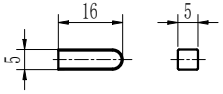

KEY

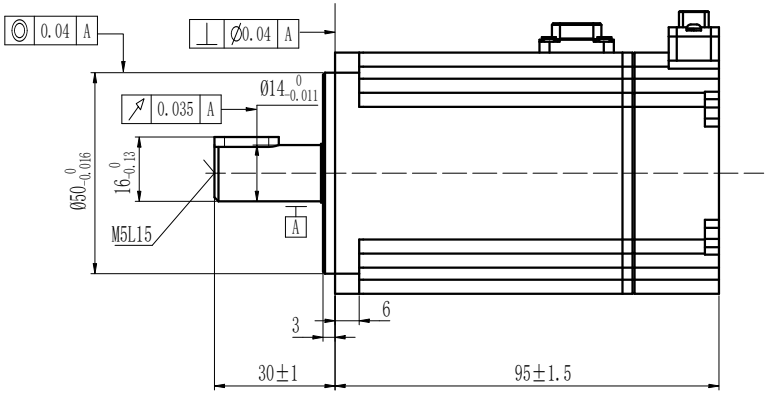

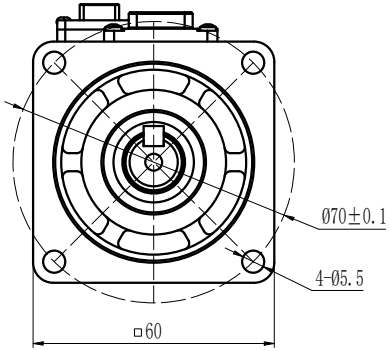

技术参数 Technical Data	
极数 No. of poles	10
额定电压 AC Rated Voltage U_{AC}(V)	220
额定功率 Rated Power P_N (W)	400
额定转矩 Rated Torque T_N (N.m)	1.27
额定转速 Rated Speed n_N (rpm)	3000
额定电流 Rated Current I_N (A)	2.93
最大转矩 Maximum torque T_m (N.m)	3.81
最大电流 Maximum Current I_m (A)	9.4
连续静态转矩 Standstill torque T_S (N.m)	1.4
连续静态电流 Standstill Current I_S (A)	3.2
线电阻 Resistance line-line R_L (Ω)	4.1
线电感 Inductance line-line L_L (mH)	8.95
电气时间常数 Electrical time constant τ_e (ms)	2.18
机械时间常数 Mechanical time constant τ_m (ms)	0.74
反电势常数 Voltage constant K_e (V/krpm)	31
转矩常数 Torque constant K_t (Nm/A)	0.51
转动惯量 Rotor moment of inertia Jm (Kg.cm^2)	0.274
最大径向力 Max. radial force Fr(N)	180
最大轴向力 Max. axial force Fa(N)	90
反馈装置 Feed back device	AM-M16/S17Bit
绝缘等级 Insulation class	F
防护等级 Protection level	IP67
重量 Weight (Kg)	1.3

Performance Curve (V1.1)

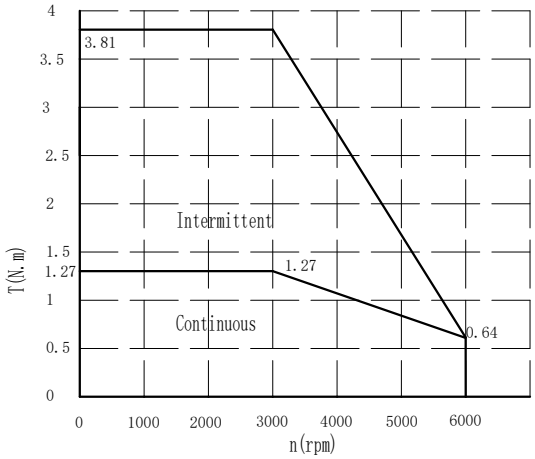

SN:V5NAKOYYYDDDNNNN

VER	DESCRIPTION OF CHANGE	VER	ECN NO.	CHANGE	APP'D	DATE
V1.1	修正T-N曲线	V1.1	KA230154	CFF	SL	2023.04.26

FINAL TOLERANCE REFERENCE
GB/T 1804-m Unit:mm
LINER
≤6 ±0.1 >6~30 ±0.2
>30~120 ±0.3 >120~400 ±0.5

MATERIAL

FIRST ANGLE PROJECTION

DESIGN	CFF	DATE 2023-03-29
CHECK	WYD	2023-03-29
APPROVE	SL	2023-03-29

SHEET 1 OF 1

P/NO.	307090103
TITLE	Outside Drawing
USED ON	SMK60S-0040-30YAK-5LSA
SCALE:	VER: V1.1

KINCO MOTOR